TK110558

3RD ANG. PROJ.

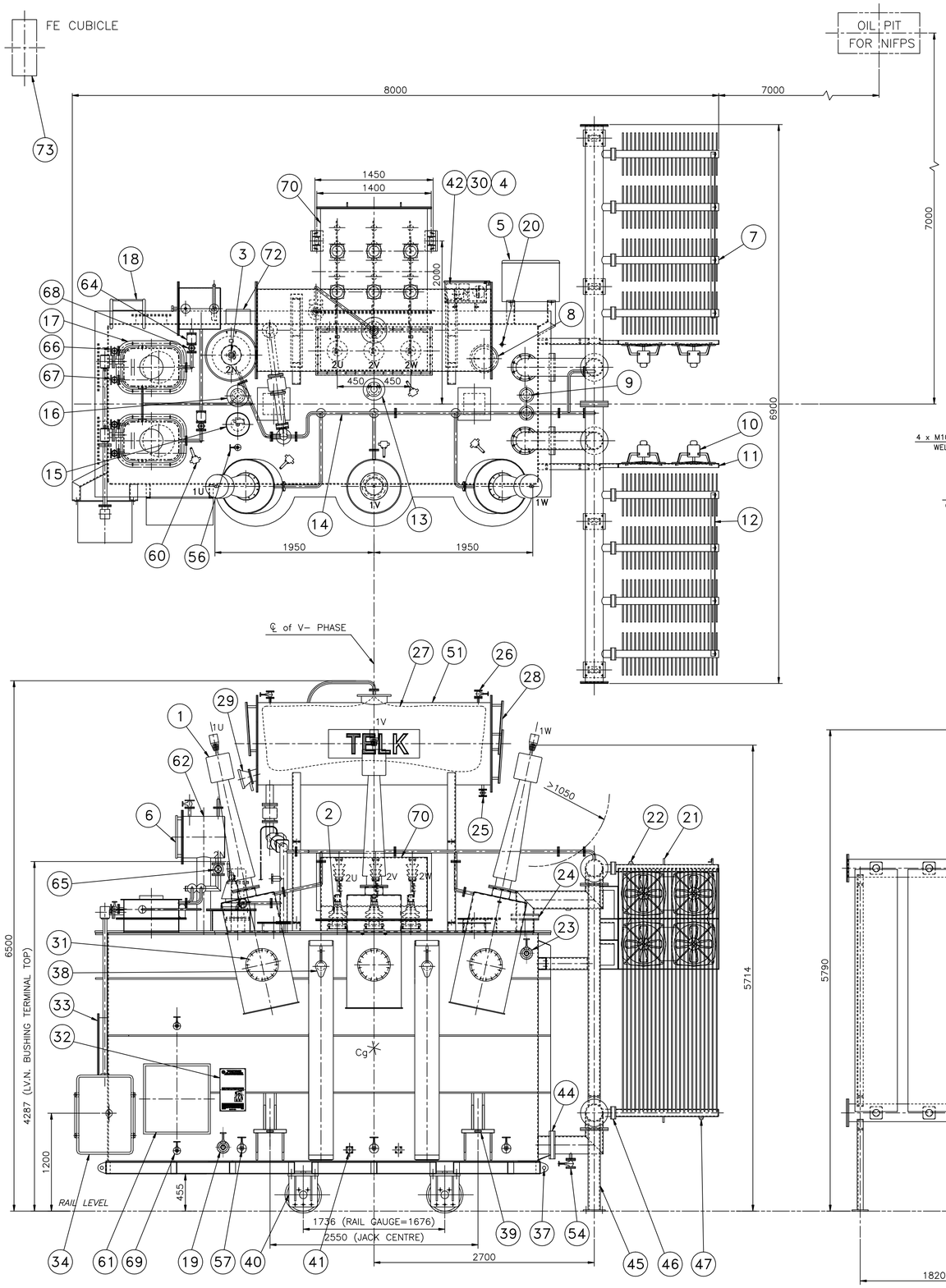

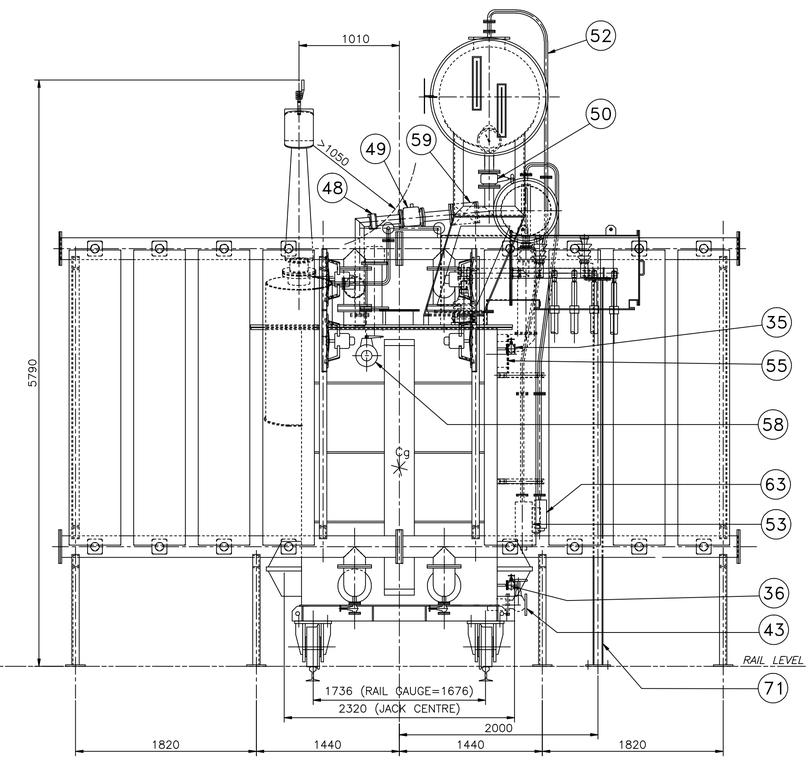

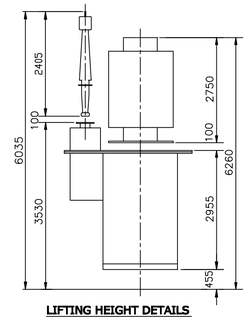

LIFTING HEIGHT DETAILS

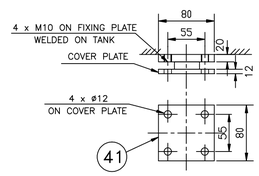

EARTH PLATE DETAILS

TRANSFORMER SPECIFICATION	
RATED POWER	30/40MVA
PHASES	3
FREQUENCY	50 HZ
VOLTAGE RATIO	110/11kV
VOLTAGE VARIATION -10% TO +10% @ 1.25% STEPS ON HV FOR HV VARIATION	
COOLING	ONAN/ONAF
VECTOR SYMBOL	Dyn11
DIM OF LAR. PACKAGE(LxBxH)	5950x3200x4000mm

SCHEDULE OF MASS(kg)	
CORE & WINDING ASSEMBLY	32000 Kg
TANK & FITTING	22600 Kg
OIL (TOTAL QTY.) 20000 Lts.	16400 Kg
TOTAL MASS	71000 Kg
UNTANKING MASS	32000 Kg
TRANSPORTATION WEIGHT (OIL FILLED)	61000 Kg

NO.	REFERENCE DRAWINGS	DRG. NO.
1	FOUNDATION DETAILS	TK214756
2	RATING & CONNECTION DIAGRAM PLATE	TK214757
3	145KV 800A HV BUSHING	TK340588
4	17.5KV 3150A LV & LVN BUSHING	TK340589

No.	DESCRIPTION OF ITEMS	QTY.
1	145kV, 800A CONDENSOR BUSHING FOR HV WITH TERMINAL CONNECTOR	3no
2	17.5kV, 3150A LV BUSHING WITH TERMINAL CONNECTOR	3no
3	17.5kV, 3150A LVN BUSHING	1no
4	WINDING TEMPERATURE INDICATOR	1no
5	COOLER CONTROL CUBLCLE IP55	1no
6	POLG FOR OLTC CONSERVATOR	1no
7	RADIATORS (APPROX.)	8no
8	INSPECTION/HAND HOLE FOR INTERNAL BODY EARTHING	1no
9	SENSING BULB FOR OTI & WTI	2no
10	COOLING FAN (3+1 STANDBY) (APPROX.)	2Set
11	COOLING FAN SUPPORT	2no
12	RADIATOR TIE ANGLE	2Set
13	TERMINAL BOX FOR LV WTI BCT	1no
14	AIR RELEASE PIPES	1Set
15	PRESSURE RELIEF DEVICE	1no
16	TERMINAL BOX FOR LVN BCT	1no
17	ON LOAD TAP CHANGER TELK MAKE	1Set
18	LADDER WITH SAFETY DEVICE	1no
19	FILTER VALVE (LOWER) 50mm TAPER PLUG	1no
20	THERMOMETER POCKET	1no
21	LIFTING LUG FOR RADIATOR (PER RADIATOR)	1no
22	AIR RELEASE PLUG FOR RADIATOR (PER RADIATOR)	1no
23	FILTER VALVE (UPPER) 50mm TAPER PLUG	1no
24	SHUT OFF VALVE FOR COOLER (UPPER) 200mm BUTTERFLY	2no
25	DRAIN VALVE FOR CONSERVATOR 25mm GLOBE VALVE	1no
26	CONSERVATOR VACUUM/FILL/FILTER/AIR RELEASE VALVE 25mm GLOBE VALVE	2no
27	AIR CELL FOR CONSERVATOR	1no
28	PRISMATIC OIL LEVEL GAUGE FOR MAIN CONSERVATOR	2no
29	MAGNETIC OIL LEVEL GAUGE 150mm	1no
30	OIL TEMPERATURE INDICATOR	1no
31	HAND HOLE FOR BUSHING CONNECTION/INSPECTION	3no
32	RATING AND CONNECTION DIAGRAM PLATE	1no
33	MANHOLE FOR OLTC CONNECTION/INSPECTION	2no
34	DRIVING MECHANISM CASE FOR OLTC	1no
35	SAMPLING VALVE (UPPER) 15mm GLOBE VALVE	1no
36	SAMPLING VALVE (LOWER) 15mm GLOBE VALVE	1no
37	HAULING EYE FOR TRANSFORMER	8no
38	LIFTING HOOK FOR TRANSFORMER	4no
39	JACK BOSS	4no
40	ø400 BI–DIRECTIONAL ROLLER	4no
41	EARTH PAD FOR TRANSFORMER	2no
42	WTI & OTI ENCLOSURE IP55	1no
43	DRAIN VALVE 100mm TAPER PLUG	1no
44	SHUT OFF VALVE FOR COOLER (LOWER)200mm BUTTERFLY	2no
45	COOLER SUPPORT	4no
46	SHUT OFF VALVE FOR RADIATOR 80mm BUTTERFLY (PER RADIATOR)	2no
47	DRAIN PLUG FOR RADIATOR (PER RADIATOR)	1no
48	SHUT OFF VALVE FOR BUCHHOLZ RELAY 80mm BUTTERFLY	1no
49	DOUBLE FLOAT BUCHHOLZ RELAY FOR MAIN CONSERVATOR 80mm	1no
50	SHUT OFF VALVE FOR CONSERVATOR 80mm TAPER PLUG	1no
51	CONSERVATOR	1no
52	BREATHER CONNECTION PIPE	1Set
53	MAINTENANCE FREE BREATHER FOR MAIN CONS. (MESSKO, TYPE: DB100T)	1no
54	DRAIN VALVE FOR COOLER BANK 25mm GLOBE VALVE	2no
55	INSPECTION HOLE/HAND HOLE FOR LV BUSHING CONNECTION	1no
56	AIR RELEASE VALVE ON TANK COVER 15mm	1no
57	25MM GLOBE VALVE FOR NIFPES	6no
58	100MM AUDCO VALVE FOR NIFPES	1no
59	80MM PNRV FOR NIFPES	1no
60	FIRE DETECTOR FOR NIFPES	ADEQUATE
61	ON–LINE DGA CUBICLE	1no
62	CONSERVATOR FOR OLTC	1no
63	SILICAGEL BREATHER FOR OLTC	1no
64	BUCHHOLZ RELAY FOR OLTC CONSERVATOR 25mm	2no
65	OLTC CONSERVATOR SHUT OFF VALVE 50mm	1no
66	OIL INLET VALVE FOR OLTC 25mm (PER OLTC)	1no
67	OIL OUTLET VALVE FOR OLTC 25mm (PER OLTC)	1no
68	SHUT–OFF VALVE FOR OLTC BUCHHOLZ RELAY 25mm. (PER OLTC)	1no
69	VALVE FOR ON–LINE DGA 15mm.	2no
70	LV CABLE BOX	1no
71	SUPPORT FOR LV CABLE BOX	2no
72	NIFPES SIGNAL BOX	1no
73	FIRE EXTINGUISHING CUBICLE	1no

NOTE:

1. A TOLERANCE OF ±10% SHALL BE ALLOWED IN DIMENSIONS AND MASS.
2. THE FOUNDATION SHALL BE ARRANGED BY THE CUSTOMER TO SUIT THE SOIL CONDITION.
3. FINISH PAINT : ENAMEL PAINT SHADE 697 OF IS 5.
4. POSITION OF FIRE DETECTOR (ITEM NO.60) & POSITION OF OIL PIT & FE CUBICLE SHOWN ARE TENDATIVE. FINAL QUANTITY OF DETECTORS, VALVES SHALL BE FIXED AFTER FINALISING THE SAME BY NIFPES SUPPLIER.

CUSTOMER	COCHIN INTERNATIONAL AIRPORT LIMITED
ORDER NO.	EL2/4510001098/0 DTD.02.02.2018

ALL DIMENSIONS ARE IN mm UNITS | STATUS OF DRG. | PROVIDE

DRN	SHAJ	27.02.18	PROJECTION	SCALE
TCD	CAD			NTS
RGD	SHAJ	27.02.18		
CHD	RR	27.02.18	TELK ANGAMALLY KERALA INDIA	
	SAN	27.02.18		
APPD	MM	27.02.18		

TITLE: GENERAL OUTLINE ARRANGEMENT OF CIAL 40MVA TRFR.

TELK DRG NO R TK110558

NO.	BRIEF RECORD OF CORRECTION	REVISED	CHECKED	APPROVED	DATE
5					
4					
3					
2					
1					